ADM Multi-tone alarm sounder with LED light indicator

- 132 mm cubic-design multi-tone alarm sounder with built-in LED steady/flashing light indicator
- Types of light can be switched externally
- For industrial and general applications
- UV-stabilised material
- 32 tones can be selected, 3 tones can be switched externally
- Max. 113 dB (A) sound pressure, infinitely adjustable
- High degree of protection IP 65 & impact resistance IK09
- Optional mounting type using metal bracket

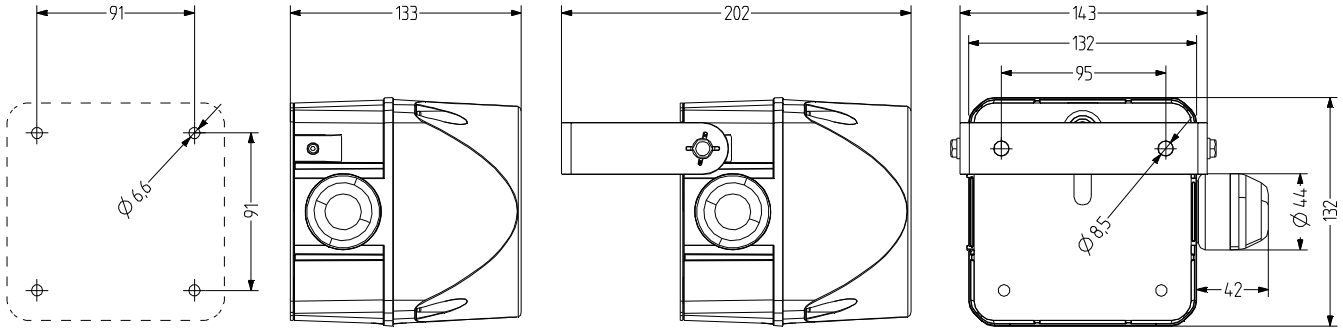

TECHNICAL DATA

Housing	132 mm (square), Polycarbonate red
Lens	Polycarbonate, ribbed inside orange, red, clear, blue, green or yellow
Type of mounting	any, Sound outlet opening at bottom or horizontal
Connection technology	Screw/plug-in terminal up to 2,5 mm²
Beacon type	Steady beacon or Flashing beacon
Luminous intensity	2 Cd
Strobe/flash frequency	1 Hz
Tone	32 Tones, 3 Tones can be switched externally, various (see tone table)

Volume	113 dB (can be adjusted with potentiometer)
Tone frequency	150-2.900 Hz
Duty cycle	100 %
Service life	Light source: 100.000 h
Operating temperature	-30 °C / +60 °C
Degree of protection	IP65
Impact resistance	IK09
Weight	660 g

IP65 | +60 °C -30 °C | IK09 | 2 Cd | 113 | 32 | CE | cULus

ADM

ORDER DATA

Lens colour	Nominal voltage	Voltage range (V)	Nominal current (A)	Order number
orange	24 V AC/DC	+/- 10 %	0,267	875 271 405
	110-120 V AC	+/- 10 %	0,100	875 271 310
	230-240 V AC	+/- 10 %	0,100	875 271 313
red	24 V AC/DC	+/- 10 %	0,267	875 272 405
	110-120 V AC	+/- 10 %	0,100	875 272 310
	230-240 V AC	+/- 10 %	0,100	875 272 313
yellow	24 V AC/DC	+/- 10 %	0,267	875 277 405
	110-120 V AC	+/- 10 %	0,100	875 277 310
	230-240 V AC	+/- 10 %	0,100	875 277 313

AMK

AB2

AG2

AKV

ACCESSORIES

Type	Type of accessory	Weight	Order number
AMK	Mounting set for combining several pieces of signalling equipment of the same size	10 g	874 010 900
AB2	Mounting set for metal bracket for mounting in any direction (e.g. on mounting platforms)		874 032 900
AG2	Flat seal for installation on smooth surfaces		874 022 900
AKV	Cable gland M20×1,5		698 800 026

ADM

TONE TABLE

	STAGE 1 S1	Tone type	Frequency Hz	Pictogram	Repeat rate	Specific application	ASS-T/ADS-T max dB	ASS-T/ADS-T ADS-T	ASM max dB	ASL max dB	ASX max dB	STAGE 2 S2	STAGE 3 S3
	Tone 01	continuous	660 Hz			Swedish alarm	103	——	107	114	116	tone 16	tone 12
	Tone 02	continuous	1000 Hz			PFEER toxic gas	97	——	110	113	121	tone 16	tone 25
	Tone 03	continuous	2400 Hz				106	——	111	120	125	tone 21	tone 17
	Tone 04	intermittent	420 Hz		0,625 s on / 0,625 s off	Australian alert AS1670	98	- - - -	106	109	117	tone 21	tone 01
	Tone 05	intermittent	660 Hz		1,8 s on - 1,8 s off	Swedish alarm	103	- - - -	107	114	117	tone 21	tone 01
	Tone 06	intermittent	660 Hz		0,15 s on / 0,15 s off	Swedish alarm	103	- - - -	107	114	117	tone 16	tone 01
	Tone 07	intermittent	970 Hz		1 s on, 1 sec off	PFEER Alarm, BS5839-1:2002	99	- - - -	111	113	122	tone 18	tone 01
	Tone 08	intermittent	970 Hz (950)		0,5 s on/0,5 s off x 3 then 1 s off	ISO 8201 low tone, US Temporal	101	- - - -	111	113	122	tone 16	tone 03
	Tone 09	intermittent	800 Hz		0,25 s on / 1 s off		108	- - - -	112	112	124	tone 27	tone 03
	Tone 10	intermittent	700 Hz		0,15 s on / 0,15 s off, total 1 min.	Swedish alarm SS 031711	102	- - - -	107	112	119	tone 18	tone 02
	Tone 11	intermittent	720 Hz		0,7 s on / 0,3 s off	Industrial Alarm Germany	102	- - - -	110	111	123	tone 02	tone 29
	Tone 12	intermittent	2400 Hz		0,5 s on / 0,5 s off		106	- - - -	111	120	126	tone 03	tone 01
	Tone 13	intermittent	2850 Hz		0,5 s on/0,5 s off x 3 then 1 s off	ISO 8201 high tone, US Temporal	97	- - - -	108	111	120	tone 03	tone 17
	Tone 14	alternating	440 - 554 Hz		0,4 s (440Hz) / 0,1 s (554Hz)	AFNOR France, NFS 32-001	103	——	109	109	118	tone 16	tone 01
	Tone 15	alternating	554 - 440 Hz		1 Hz	Swedish alarm	103	——	109	109	118	tone 01	tone 16
	Tone 16	alternating	800 - 1000 Hz		2 Hz		108	——	113	113	121	tone 02	tone 09
	Tone 17	alternating	2400 - 2900 Hz		2 Hz		106	——	111	120	126	tone 03	tone 01
	Tone 18	alternating	1000 - 2000 Hz		1 Hz	Singapore	107	——	110	120	127	tone 02	tone 03
	Tone 19	sweeping	500 - 1500 Hz		10 Hz		108	——	113	119	124	tone 02	tone 01
	Tone 20	sweeping	150 - 1000 Hz		rising 10 s, 40 s on, falling 10 s	Industrial Alarm Germany	108	——	113	114	123	tone 25	tone 29
	Tone 21	continuous	400 Hz		simulated horn		101	——	106	109	115	tone 16	tone 02
	Tone 22	sweeping	500 - 1200 Hz		rising in 3,75 s/ 0,25 s off	Australien evacuation AS 2220	108	——	113	117	124	tone 02	tone 09
	Tone 23	sweeping	500 - 1200 Hz		rising in 3,5 s/ 0,5 s off	Netherlands NEN 2575:2000	108	——	113	117	124	tone 02	tone 09
	Tone 24	sweeping	500 - 1200 Hz		0,5 s on/0,5 s off x 3 / 1,5 s off	Australia AS1670 evacuation	108	——	113	117	124	tone 02	tone 09
	Tone 25	sweeping	1200 - 500 Hz		1 Hz	evacuation Germany, DIN 33404-3	108	——	113	117	124	tone 02	tone 32
	Tone 26	sweeping	500 - 1200 Hz		0,3 Hz		108	——	113	117	124	tone 01	tone 32
	Tone 27	sweeping	1400 - 1600 Hz		rising in 1 s/falling in 0,5 s	NFC 48-265	102	——	110	119	124	tone 02	tone 09
	Tone 28	sweeping	2400 - 2900 Hz		1 Hz		106	——	111	120	126	tone 17	tone 03
	Tone 29	bell					102	——	108	120	122	tone 16	tone 02
	Tone 30	slow rise	500 - 2400 Hz		siren rising in 3 s, then cont. 2400 Hz		108	——	113	120	127	tone 16	tone 01
	Tone 31	slow rise	300 - 1200 Hz		siren rising in 3 s, then cont. 1200 Hz		108	——	113	117	124	tone 16	tone 01
	Tone 32	3-tone gong	660-550-440 Hz		repeating 3-tone gong, 7s		90	——	93	X	X	tone 29	tone 01
		chime	970 - 800 Hz		repeating ding-dong, 1 Hz			X	X	113	123	tone 29	tone 01